artos®
the art of style

F301-3 TECHNICAL DATA SHEET

otella vessel lav faucet,
medium

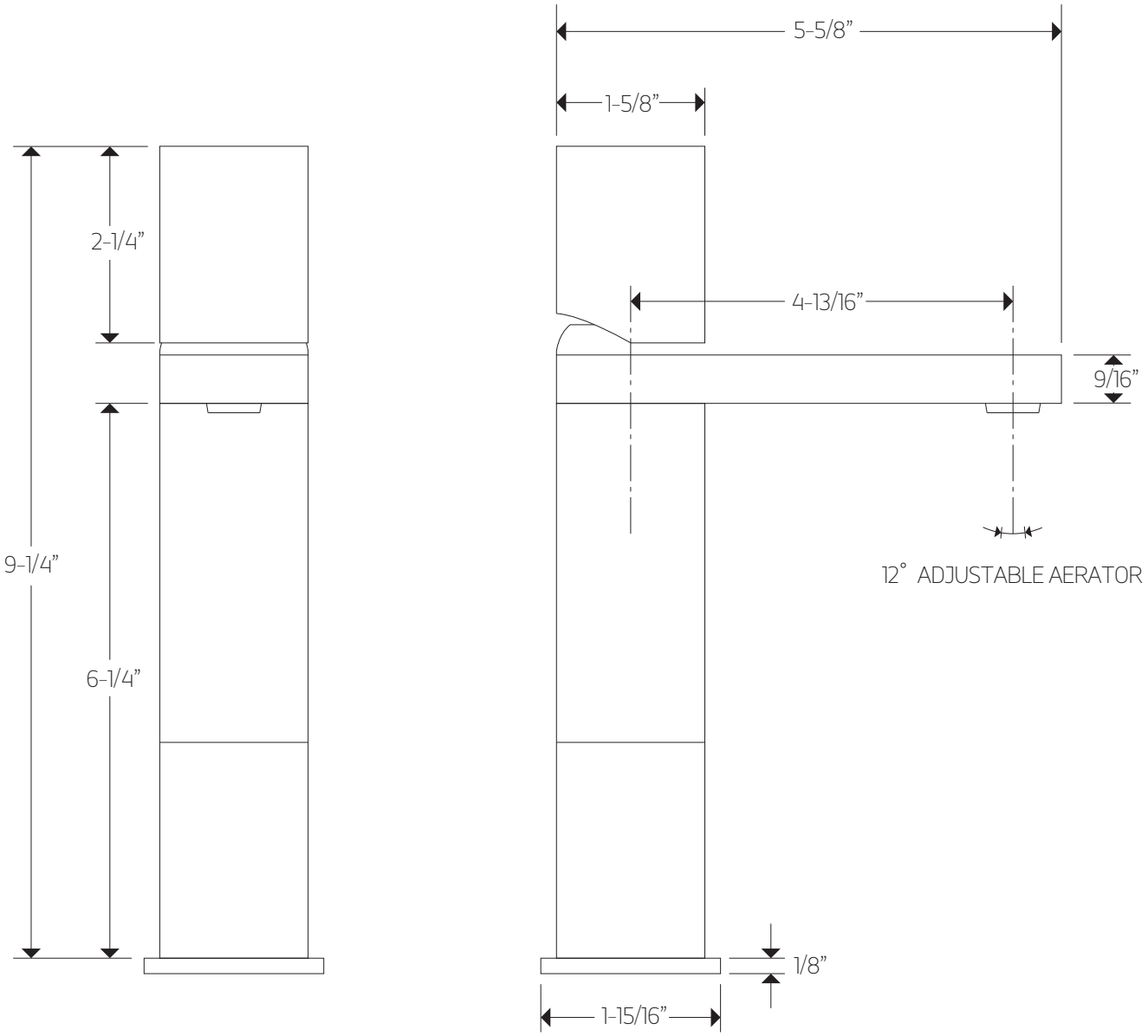

©2018 ed. All technical and pricing information is subject to change without prior notice. To confirm accuracy check with Artos customer service.

artos®

F301-3

OPERATING SPECIFICATIONS

otella vessel lav faucet,
medium

FEATURES
Adjustable Aerator

OPERATING PRESSURE
Minimum: 15 psi
Maximum: 75 psi
Above 90psi it may be necessary to install a pressure reducer

FLOW RATE
1.2 USGPM

APPROVALS

ICC ES C PMG

©2018 ed. All technical and pricing information is subject to change without prior notice. To confirm accuracy check with Artos customer service.