ARTOS®

Opera In Wall Lav Faucet Single Handle, Extended Spout F501-9
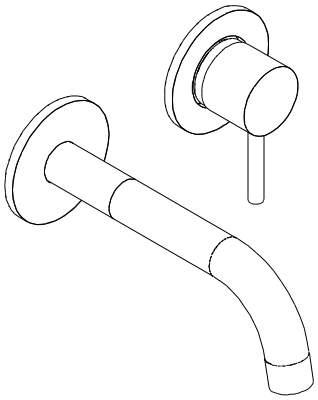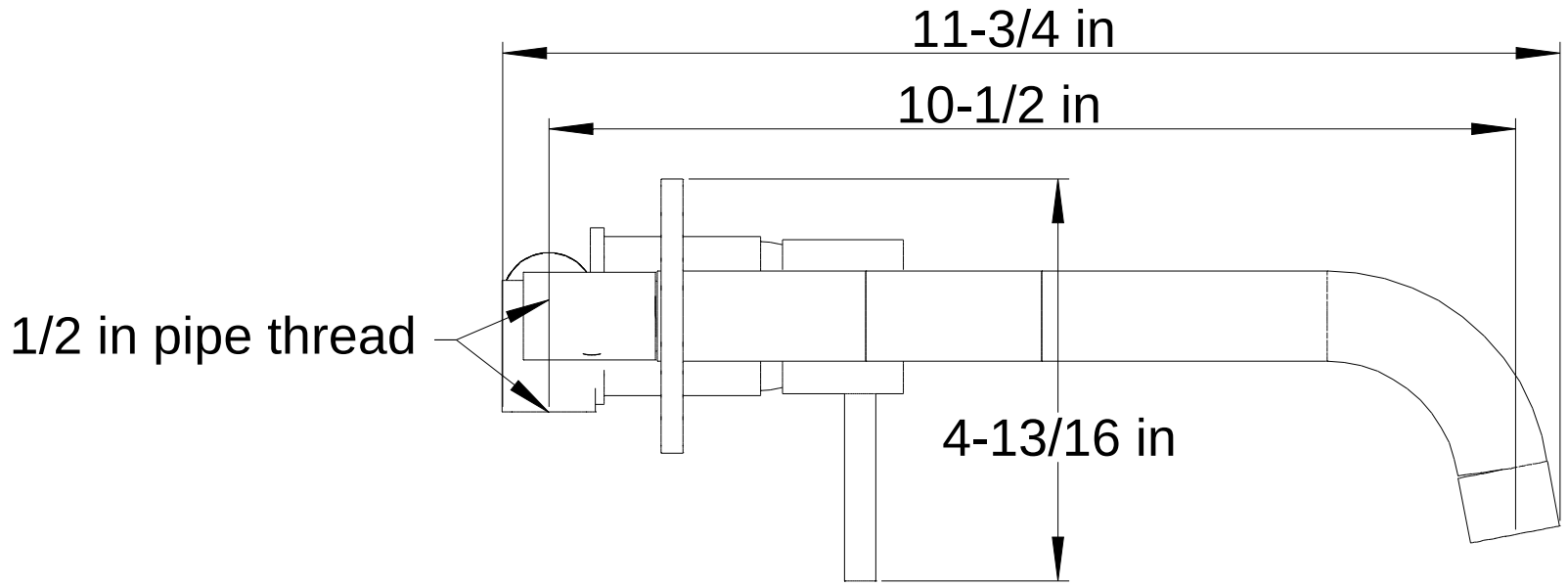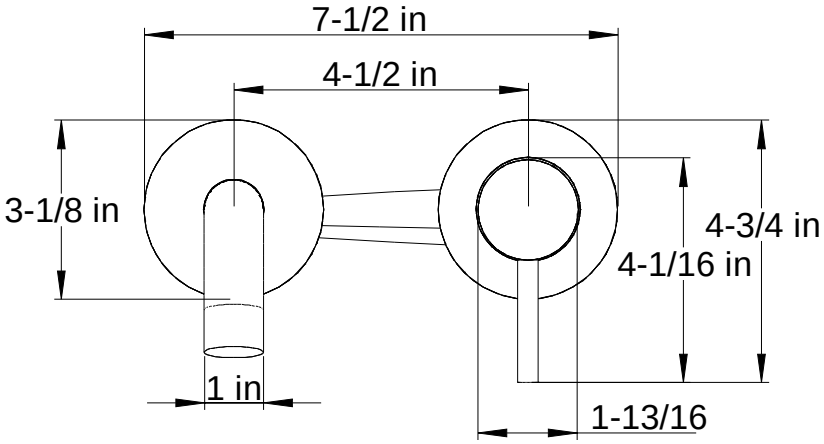
Finishes:
Chrome
Brushed Nickel